Application of Intelligent Technology in Electrical Control Engineering

Zhang Xingwei

Xi'an Railway Vocational & Technical Institute, Shaanxi, 710026, China

zhangxingwei@126.com

Keywords: intelligent technology; electrical control engineering; solenoid valve; electric locomotive; electro-pneumatic control unit.

Abstract: Intelligent technology is widely used in social electrical control engineering, which greatly affects the development of current electrical control engineering. This paper mainly introduces the application process and key points of many intelligent technologies for electric locomotives, and puts forward specific compatible design scheme of electromagnetic valves for harmonious electric locomotives, which fully reflects the superiority of intelligent technology in electric control engineering.

1. Introduction

Harmonious electric locomotive is widely used in modern railway transportation system. The control system of harmonious electric locomotive includes converter technology with strong interference ability, high voltage ability, high current rising rate and switching frequency of high power devices. At the same time, it also adopts computer processor with high electromagnetic sensitivity to control intelligent system. The following is an analysis of the logic control of the electro-pneumatic control unit.

2. Design and analysis of logic control system for electro-pneumatic control unit of electric locomotive system

Harmonious electric locomotive driver operates EBV to generate various types of signals, which are then processed with IPM, and then transferred to EPCU. Finally, the air passage of each sub-module in EPCU will assist electric locomotive braking system to realize braking function. So as a whole, the EBV of electronic brake valve controls each sub-module of EPCU and IPM of brake microprocessor based on the logic of electro-pneumatic control unit. The following will mainly introduce the design of the logic control system of the electro-pneumatic control unit of the electric locomotive system.

2.1 Design of electronic brake valve

In the design process of the electronic brake valve, the function and control position of the electronic brake valve should be fully considered. A special EBV control panel should be set up for the electronic brake valve EBV to play its inherent role in collecting the position signal of the handle of the electronic brake valve. At the same time, it should be transmitted to IPM processing through CAN network and forwarded to form electro-pneumatic control unit EPCU to execute relevant commands. It is worth mentioning that the design of control board for EBV is mainly based on single chip computer. It is also an important source of control signals for the whole electric locomotive braking system.

In the design of EBV output of electronic brake valve, the position information of the handle composed of its switching and analog variables should be reasonably designed. The design of switch information includes the design of relief operation position, restraint position, reconnection control position, emergency brake position and side pressure information of individual brake handle, and the

  DOI: 10.25236/eeems.2018.054

analog value is generated by the brake zone position of individual brake handle and automatic brake handle. Combined with the above contents, a complete electronic brake valve system can be set up for the brake system of electric locomotive, and an analog signal acquisition circuit is established, as shown in Fig. 1.

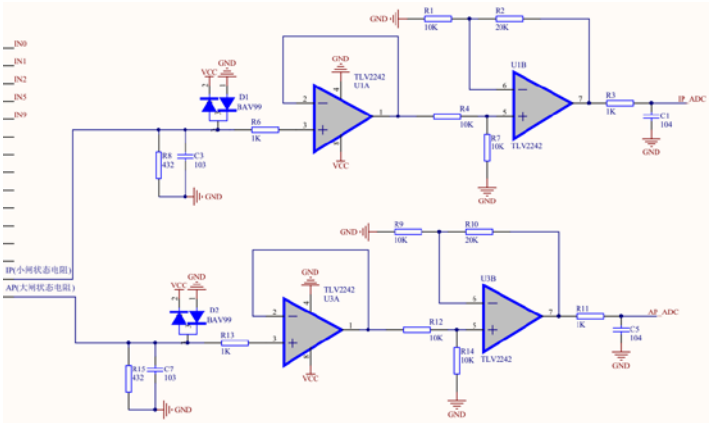

Fig. 1 Analog signal acquisition circuit

2.2 Design of microprocessors

In the design of microprocessor IPM, the main task is to design the information transfer station of electric locomotive brake system, construct the network receiver with CAN communication line, specially receive the signal from EVB of electronic brake valve, at the same time judge and process and send the signal content of EPCU sub-module. Specifically, EPCU sub-module control board can realize the actual control process for solenoid valves, and then select the development board with CAN communication and RS422 communication interface by microprocessor IPM, and design the hardware platform of electric locomotive braking system combined with these two hardware development contents. In the process of IPM design of microprocessor, it is necessary to consider the single chip computer of CAN bus controller. Among them, CAN_A_RX and CAN_A_TX are connected with CAN bus interface. All data are transmitted mainly through interface, while U3 exists as a transceiver of CAN. It hopes to realize the interconnection with CAN of other modules of external circuit of the system by chip and realize the necessary data communication. Function.

In the process design of CAN initialization, it is necessary to set the clock of the CAN module to ensure that the input and output foot of the CAN module is pulled up and the automatic retransmit function is effectively interrupted and shut down. In the design process, it is necessary to empty the data storage, reset the baud rate, and ensure the effective reception of information. At the same time, the special location of data memory should be set up.

In the braking system of harmonious electric locomotive, CAN is specially designed to initialize and send messages. The main function is to select a blank mailbox to send label information symbols. The relevant data content is set according to the length of data to ensure that the sending position of data memory is set to 1. TXRQ will be placed in 1 position after requesting to send information, which means that there is no mailbox message to send out. In this case, we should ensure that other messages are sent out at a lower priority than this mailbox. In the process of sending messages, the data storage should be reset, and the authentication information, type information and data information should be set. Then the data length should be set to ensure that the TME is in an interrupt state, and the message content should be sent at the same time to ensure that the CAN sends the message smoothly.

In the process of receiving messages, the software will access the receiving FIFO output mailbox and read the data. It mainly receives the first message content in FIFO. At the same time, we should refer to CAN bus protocol to judge whether the message is received correctly, and then implement identifier filtering. Specifically, if the software needs to read out the contents of the processed messages in the process of processing the message data, the system software will set and operate the CAN_RFxR data storage by RFO setting 1, and release the content of the message data to provide

storage space for other subsequent messages. The following processes are also covered in the process of receiving message data:

Authentication Information Reading Type Information Reading Data Length Reading Data Content Extraction CAN Receiving Message Process Display

In addition, it is necessary to reset TIR data storage and ensure that TME can be interrupted while sending other message data smoothly.

2.3 Design of the Electro-pneumatic Control Unit

In the design process of each sub-module of EPCU, the power supply module PSJB and the standby module DBTV need to be prepared. In addition, for the other six sub-modules, special control boards need to be set up to implement logical control of the sub-module. Specifically, C8051F500 is used in the design process of EPCU and its sub-module control board, which specially implements the unified design. It mainly plays the functions of timer and watchdog of MCU, and classifies and limits the functions of the parts, analog parts and other digital functional parts, so as to ensure the output and events of solenoid valve and PWM. Full implementation of capture and other functions.

Linear stabilizer LM2937-3.3 is used in the design of single-chip computer of electro-pneumatic control unit. It is specially responsible for providing electric energy and adjusting the voltage from traditional 5V to 3.3V. As a stable linear regulator, LM2937-3.3 can provide a very stable output to increase the filter capacitance, and can be used with the transient suppressor to output a stable 3.3V voltage. The design also avoids the high voltage phenomenon caused by the coupling problem in the circuit, which will cause the system controller to be destroyed directly. So this paper also designs the special power supply circuit of the electro-pneumatic controller as shown in Figure 2.

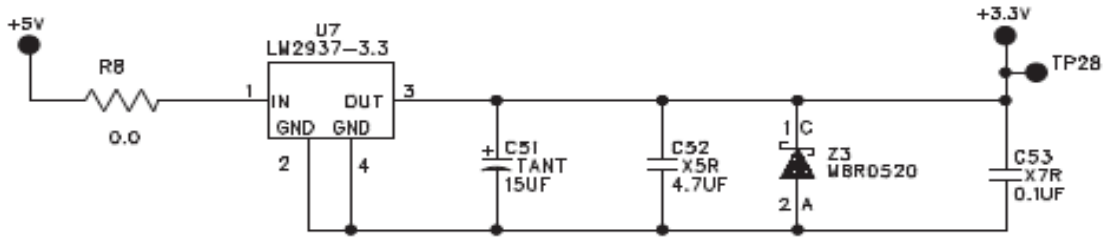

Fig. 2 Schematic diagram of power supply circuit for electro-pneumatic control system controller

As shown in Figure 3, the controller of the electro-pneumatic control system only uses EPCU unit and several sub-module control boards, which have the functions of solenoid valve and PWM output. The one-way switch can effectively control the output of power supply. At the same time, it is also responsible for emergency signal acquisition. Four pressure sensors are responsible for signal acquisition. In addition, two PWM outputs are specially used to control the APP function of each sub-module control board of EPCU, the pneumatic solenoid valve and the REL relief exhaust solenoid valve. The two solenoid valves can respectively realize the functions of air filling and air discharging for the pipeline. The schematic diagram of the power supply circuit of the solenoid valve control circuit is given below, as shown in Figure 3.

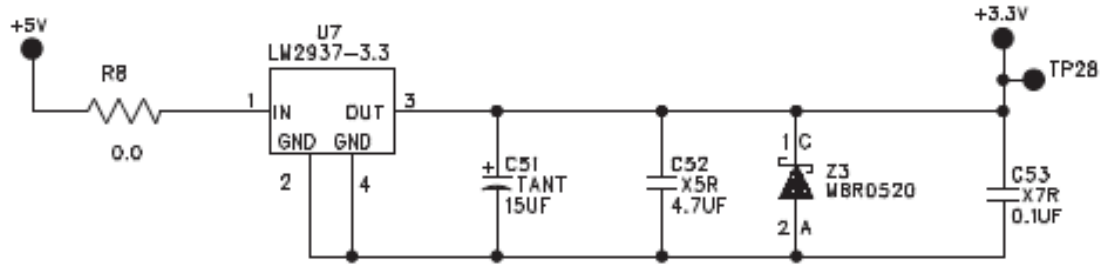

Fig. 3 The schematic diagram of solenoid valve control circuit in electro-pneumatic control unit

2.4 Design of Switching Quantity Control Unit

Aiming at the design of the switch control unit, it mainly focuses on each sub-module of EPCU. It is hoped that the effective management of electric locomotive braking system can be realized by using the above mentioned APP acting solenoid valve and REL mitigating solenoid valve, so as to realize the switch of standby working condition and function of the braking system. For example, in the management of the train brake tube excision control system, we should mainly achieve the effective control of the train brake tube excision and input, as well as the pre-control of the solenoid valve, the control of 16CP, 20CP and ERCP by the solenoid valve and the switching of the standby working conditions, specially for the various emergency braking information and switching quantity control of the electric locomotive brake system. With the background of switch control and emergency signal acquisition circuit, the signal is transmitted to the display device of electric locomotive brake system through CAN.

Generally speaking, each sub-module of electro-pneumatic control unit ECPU receives input signals through CAN and realizes effective control of air pressure in corresponding pipelines. Its control work includes management of acquisition and control targets for CAN bus, control of pressure signal and emergency brake signal by feedback management of detection sensors, and make reasonable judgement by combining signals to ensure that in electromagnetic field. Control system output pressure in valve management action. Based on this, the work flow of the electro-pneumatic control unit module should be as follows:

The electro-pneumatic control unit starts to operate signal sampling selection of emergency brake PWM output operation of solenoid valve signal output function of pressure sensor return [3]

3. Compatibility Design Scheme of Solenoid Valve for Harmonious Electric Locomotive System

3.1 Grounding design scheme

Combining with the above mentioned modules in the electric locomotive system, it is necessary to build a harmonious electric locomotive system to realize the compatible design of electromagnetic valves. For this reason, the design scheme of electromagnetic compatibility of the harmonious electric locomotive system is designed and analyzed. In this design scheme, the whole electric locomotive system is required to be grounded. Its main design features include the following four points: firstly, no grounding return row is set in the whole system; secondly, traction return is mainly connected with the body through the frame; thirdly, the bogie-oriented structure is mainly connected by grounding braided wire, which has certain grounding protection. The effect should also belong to the working protection grounding device. Fourth, the solenoid valve frame and grounding device are connected mainly through grounding wire, and the return current design is completed after the traction grounding return current is completed.

3.2 Design scheme of filtering

In the filter design, the suppression unit is mainly used to restrict the interference signal effectively. The main purpose is to suppress the transmitting process of the interference source and effectively reduce the influence of the sensitive equipment of the interference source. The converter of electric locomotive system adopts electromagnetic interference suppressor, which specially restrains 110V control power supply and avoids radiation interference caused by traction control unit, thus effectively restricting radiation interference of control power supply as a whole. In the whole system, the communication optical fiber media between electrical cabinets is also used, which can also play a certain anti-interference ability.

3.3 Cabling design scheme

Finally, the EMC should be improved in the design of cabling scheme. It is also the most important part in the design of the whole harmonious electric locomotive system. Based on the cabling design principle of the harmonious electric locomotive and referring to the cable classification, the distance between various cables should be rationalized, and the existing cables in the system should be laid differently, so as to effectively reduce the possibility of system design.

Combining with the design and wiring scheme of harmonious electric locomotive system, the solenoid valve design and wiring rule design are carried out for each electric screen cabinet. The position of main circuit, auxiliary circuit and connection interface are set up respectively, and the control circuit and connection interface are classified to realize the separate arrangement of local position of different levels of system [4].

4. Conclusion

This paper mainly introduces the related technical contents such as solenoid valve control design, circuit design and grounding wiring design of electric locomotive system. It is hoped that the operation function and intelligent technology level of electric locomotive system can be effectively improved, the intelligent and organic development of electric control engineering can be realized, and the intellectualized and integrated development needs of modern electric locomotive industry can be met.

References

[1] Shi Dongming. Application of Intelligent Technology in Electrical Automatic Control Engineering [J]. China High and New Technology, 2018 (17): 107-109.

[2] Quwei. A solenoid valve controlled car washer and its control method: China, CN201510741755.1 [P]. 2016-03-02.

[3] Liu Haibo, Wang Jiexian. Reliability design and analysis of solenoid valves for EMUs [J]. Digital users, 2018, 24 (19): 87.

[4] Yangchuan, Meng Fanhui, Yu Wenlong, et al. Reliability analysis and optimization scheme of emergency brake solenoid valve for CRH5 EMU [J]. Railway locomotive and rolling stock, 2017, 37 (6): 39-43.